Trajectory Sensitivities to Assess Influence of Components and Control Devices across Electric Power Networks

Michael J. Smith, Kevin Wedeward

Abstract

An approach to assess the influence of components and control devices at the transmission level of and electric power system is presented in this paper. The approach is based upon trajectory sensitivities and makes use of their initial and final values to quantify the impact of variations in components (e.g., transmission lines, transformers, etc.) and devices with control capabilities (e.g., load tap-changing transformers, static VAR compensators, generators, etc.). The concepts of initial and final sensitivities are presented along with an example analysis of load tap-changing transformers within a modified version of the IEEE 39-bus test system. Results show that some load tap-changing transformers have a larger reach into the power network and would be better choices for corrective action when widespread problems exist with voltage-levels. Several visualization techniques are presented for interpreting results, and include pie charts, bar graphs, three dimensional plots and indicators overlaid on one-line diagrams.

Introduction

Quantitative characterization of the impact of control devices (e.g., automatic voltage regulators, governors, load tap-changing transformers, static VAR compensators) across the transmission system have long been the objective of power system studies. Examples of methods used for such studies include PV and QV curves, linearization and small-signal analysis, and trajectory sensitivities [1]-[4]. Typically, operators, designers and researchers have an understanding of the local implications of a control action, but the consequences of that control action throughout the transmission network can be subtle. The response of the power system at large is dependent on connectivity, line parameters and the response of the other control devices dispersed throughout the power system.

This paper applies the well-established concept of trajectory sensitivities to assessment of control actions across the transmission-level of the power system. Initial and final values of the sensitivities are taken to characterize both the immediate and long-term effect of control actions. Tap-changing transformers are taken as an example of a control device and their influence is studied on a modified version of the IEEE 39-bus system. Results and associated visualizations indicate that particular devices are more influential than others, and as such, would be better choices should adjustments to voltage levels need to be made at disparate locations.

Power System Model and Trajectory Sensitivities

Disregarding the discrete events associated with the switching of protection devices, power systems can be represented as a set of differential-algebraic equations (DAE) of the form

$$\dot{x} = f(x, y, \Lambda) \tag{1}$$
$$0 = g(x, y, \Lambda) \tag{2}$$

where x are the dynamic state variables such as angles, angular velocities, internal voltages, etc., associated with generators, and internal states associated with dynamic models of loads; y are the algebraic variables that represent the magnitude and phase angle of voltages at buses where the network is assumed to be in quasi steady-state without frequency variation; Λ are the system parameters such as generator inertia, controller gains and line admittances; $f(\cdot)$ is the vector function of ordinary differential equations that represent the behavior of generators and loads; and $g(\cdot)$ is the vector function that represents complex power balance at all buses.

Trajectory sensitivities capture the variation in system variables x and y due to small changes in a parameter λ. Differentiating (1) and (2) with respect to parameters of interest yields

$$\dot{x}_\lambda = f_x(x, y, \Lambda)x_\lambda + f_y(x, y, \Lambda)y_\lambda + f_\lambda(x, y, \Lambda) \tag{3}$$
$$0 = g_x(x, y, \Lambda)x_\lambda + g_y(x, y, \Lambda)y_\lambda + g_\lambda(x, y, \Lambda) \tag{4}$$

where the notation $h_z = \partial h/\partial z$ results in a matrix and $x_\lambda = \partial x/\partial \lambda$ is the trajectory sensitivity vector that captures the variation in the states due to a small change in one of the parameters λ taken from the set Λ. The order of differentiation was interchanged since parameters are assumed to not vary with time, but rather will only be changed once. x_λ can be found three ways: by solving the DAE sensitivity equations (3) and (4) along with the system equations (1) and (2), by numerical approximation of the derivative via a finite difference of two trajectories where one is the result of a small parameter change, and by solving for the steady-state value by assuming (1)-(4) are in equilibrium ($\dot{x}_\lambda = 0$).

The simple approach of a finite difference is taken here such that

$$x_\lambda \approx \frac{x(t, \lambda_0 + \Delta\lambda) - x(t, \lambda_0)}{\Delta\lambda} \tag{5}$$

for λ_0 the nominal value of a parameter and $\Delta\lambda$ a small perturbation. Trajectory sensitivities at two particular values of time are of interest: a small amount of time Δt after the time $t = t_o$ at which the parameter value is changed and the final time as $t \to \infty$. $x_\lambda(t_o + \Delta t)$ gives a measure of the initial size and direction of state movement immediately after a parameter λ is changed by $\Delta\lambda$ at t_0. $x_\lambda(\infty)$ provides the amount and direction the state will move if the system is left to evolve to an equilibrium. Conceptually, one can argue that the initial sensitivity would be useful for control updates as "best" changes in a parameter λ could be determined on a fast time-scale while in contrast the steady-state sensitivity provides guidance as to how the parameter should be

changed once for longer-term impact. Initial and final sensitivities are computed and presented for load tap-changing transformers in a subsequent section to provide insight into which devices have the most global impact on both time-scales.

Load Tap-Changing (LTC) Transformers

A brief description of the model used for LTC transformers is presented in this section as they will be taken to be the control devices in the following section. The diagram and basic equivalent circuits for a two-winding LTC transformer are shown in Figure 1 for which model descriptions can be found in [1],[3].

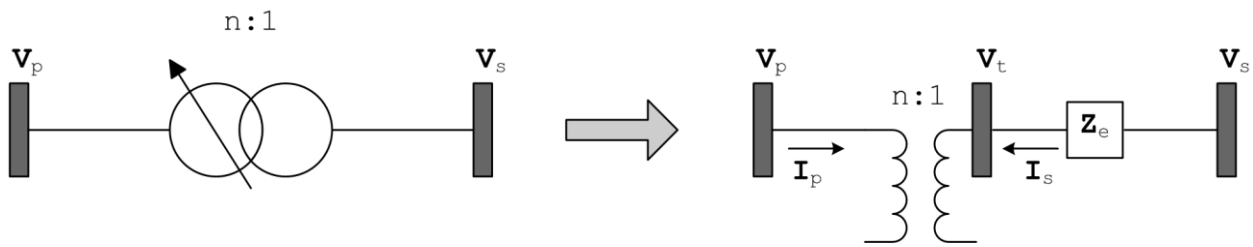

Figure 1. LTC diagram and equivalent circuit

Following the model development presented in [3], the primary voltage V_p and terminal voltage V_t, both represented as phasors, are related through the turns ratio n via

$$V_t = \frac{V_p}{n} \tag{6}$$

as are the associated secondary and primary currents I_s and I_p, respectively;

$$I_s = -nI_p \tag{7}$$

noting conservation of power dictates the opposite relationship in sign and n. Writing the current that flows on the secondary side in terms of bus voltages, manipulating and making use of equation (6) and admittance $Y_e = 1/Z_e$ yields

$$I_s = (V_s - V_p)\frac{1}{n}Y_e + V_s\left(1 - \frac{1}{n}\right)Y_e \tag{8}$$

which provides a relationship between the secondary current and transformer terminal voltages. Similarly the current flowing on the primary side can be written in terms of bus voltages and manipulated using (7) to yield

$$I_p = (V_p - V_s)\frac{1}{n}Y_e + V_p\frac{1-n}{n^2}Y_e \tag{9}$$

These forms are convenient for representing LTC transformers as a π-equivalent model as shown in Figure 2 below. π-equivalent models are commonly used to represent transmission lines in power system studies. Defining

$$Y_{ps} = \frac{1}{n} Y_e \tag{10}$$

$$Y_{pp} = \frac{1-n}{n^2} Y_e \tag{11}$$

$$Y_{ss} = (1 - \frac{1}{n}) Y_e \tag{12}$$

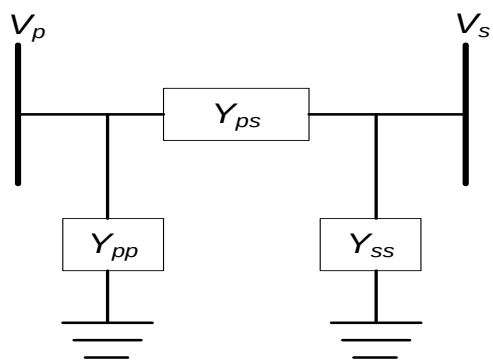

Figure 2. $\boldsymbol{\pi}$ - equivalent transmission line model

one can construct the equivalent π model for the two-winding LTC transformer that can be incorporated into the admittance matrix, and ultimately the network's power balance equations (2).

Results

The IEEE 39-bus system (see [5] for details) is used for dynamic simulation and analysis in this paper to study the initial and final impacts of substation control devices on the electric power system. The system has been modified to include four LTC transformers at substations connected to load centers spread across the grid. The modified IEEE 39-bus system is shown in Figure 3, where the green symbols represent new LTC transformers and red numerals are the identifiers of the newly added substations and LTC transformers. The original load centers have been moved from the primary side of the LTC transformer to the secondary side, for example a LTC transformer was added between existing substation 28 and newly added substation 40 where the load center at substation 28 was moved to substation 40.

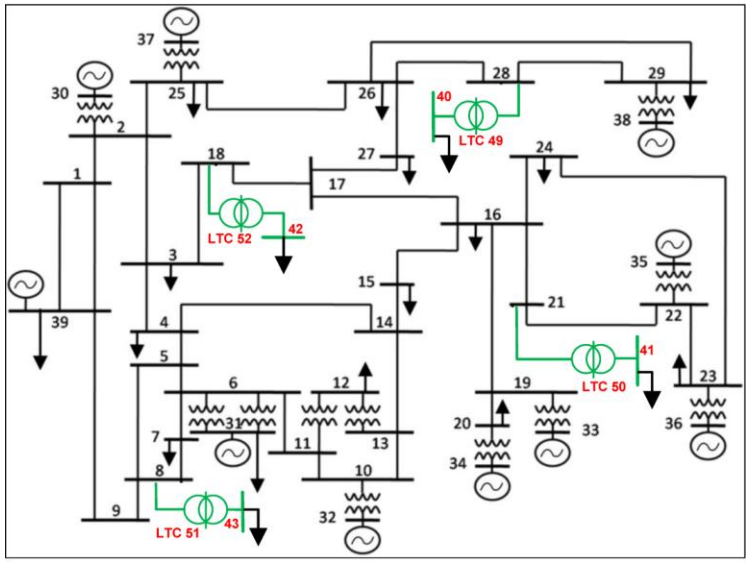

Figure 3. Modified IEEE 39-bus system

For each LTC transformer a simulation was run for 50 seconds; ten seconds into the simulation a turns ratio parameter n was perturbed by one percent of its nominal value. A sensitivity analysis tool was used to post-process and calculate the initial and final grid response to the perturbed turns ratio. The bar graphs in Figures 4 and 5 show a visual representation of the initial and final sensitivities dV/dn with the bus number on the x-axis with the corresponding sensitivity on the y-axis. Size and sign of the bars indicates how much bus-voltages would change for small positive changes in the turns ratio. The right most positive portion of the bar graph in Figure 4 can be interpreted as impacts on the voltage at substations 40, 41, 43, and 42 that are connected to the secondary winding of LTC transformers 49 (blue), 50 (cyan), 51 (red), and 52 (magenta), respectfully. As expected, LTCs have the most impact at busses to which they are connected, but it is interesting and useful to note that they lower (indicated with negative values) voltages at other busses by significant amounts.

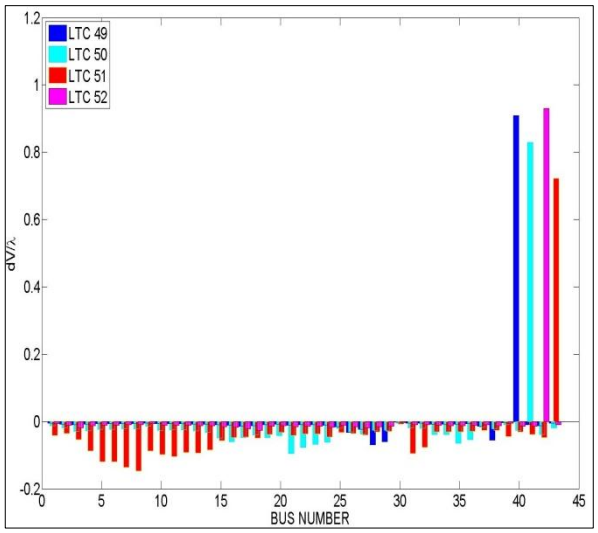

Figure 4: Initial dV/dn sensitivities for modified IEEE 39-bus system

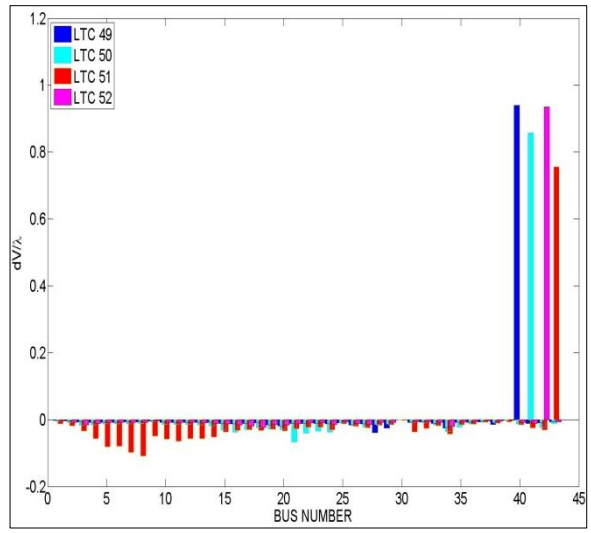

Figure 5: Final dV/dn sensitivities for modified IEEE 39-bus system

Additional Visualization Aids

The geographical one-line diagrams, three dimensional plots and pie charts in Figures 6-13 were generated to give alternate visual representations of the initial and final sensitivities dV/dn. It is shown in Figure 6 that LTC transformer 51 (red) has the largest initial reach distributed across the modified IEEE 39-bus system as indicated by the largest circle. The influence of the turns ratio on the voltage (i.e., the sensitivity) at a bus correlates to the diameter of the circle centered at that bus. Similarly, Figure 7 shows LTC transformer 51 (red) having the largest final reach distributed across the transmission system. Both initial and final sensitivities for LTC transformer 51 (red) have the largest reach into the power system and would be good choices for corrective action when widespread problems exist with voltage-levels. Figures 8 and 9 show a three–dimensional, mesh-surface plot showing the initial and final sensitivities dV/dn, the bus number and the perturbed turns ratio parameter n at LTC transformer numbers 49 (blue), 50 (cyan), 51 (red), and 52 (magenta) respectfully. LTC transformer 51 (red) shows the largest surface peak and as mentioned in previous visualizations, has the largest initial and final sensitivities. Figures 10-13 show a pie chart with exploded slices indicating the top five final sensitivities of bus-voltages to specific LTCs for all LTC transformers.

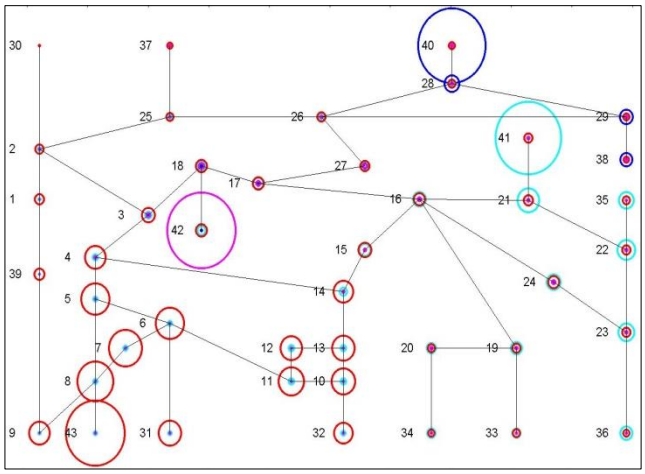

Figure 6: Graphical representation of initial dV/dn sensitivities for modified IEEE 39-bus system

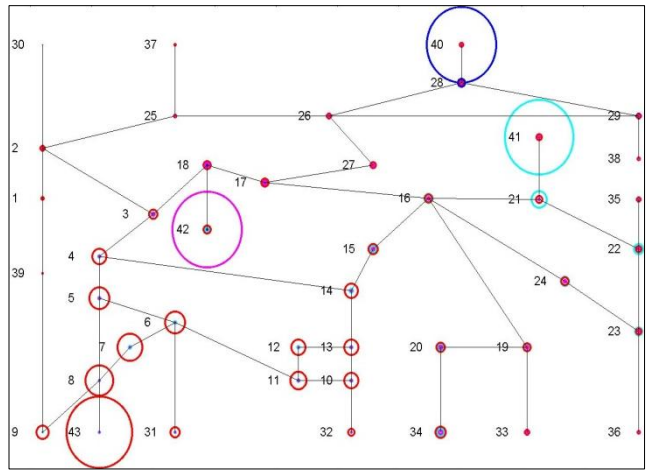

Figure 7: Graphical representation of final dV/dn sensitivities for modified IEEE 39-bus system

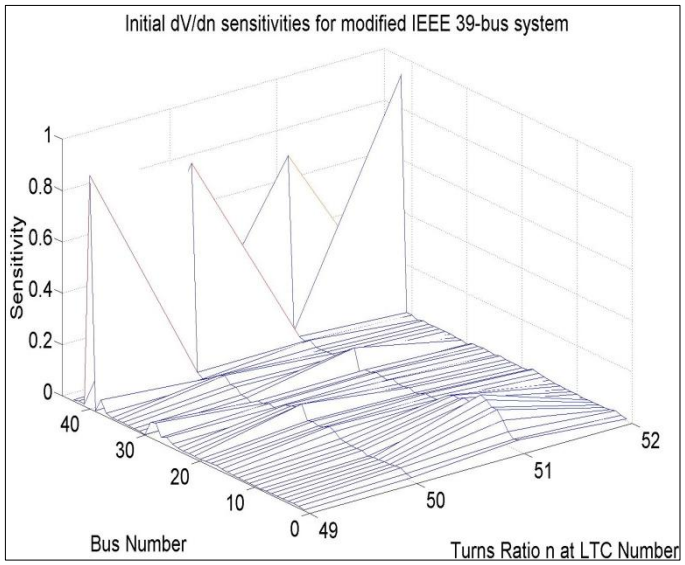

Figure 8: Three dimensional representation of initial dV/dn sensitivities for modified IEEE 39-bus system

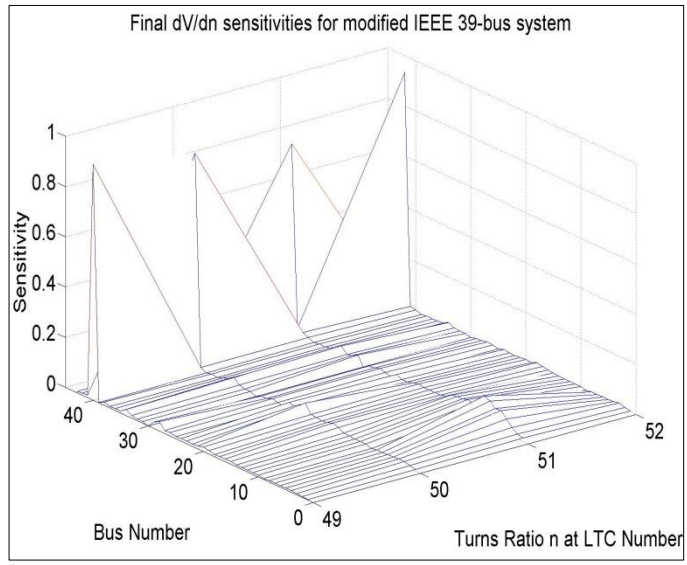

Figure 9: Three dimensional representation of final dV/dn sensitivities for modified IEEE 39-bus system

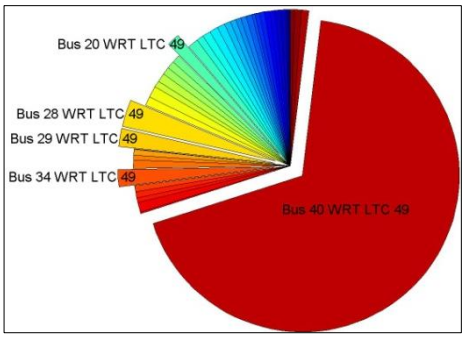

Figure 10: LTC 49 pie chart of final dV/dn sensitivities for modified IEEE 39-bus system

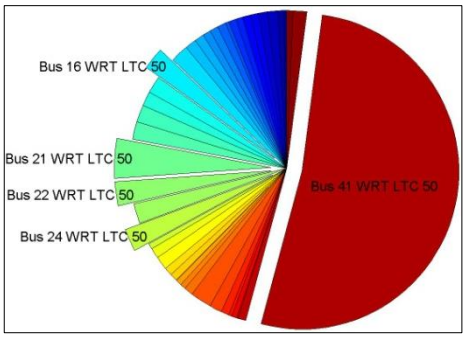

Figure 11: LTC 50 pie chart of final dV/dn sensitivities for modified IEEE 39-bus system

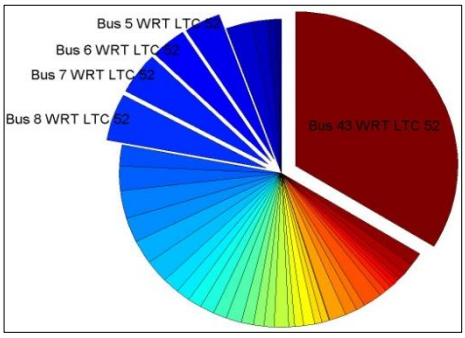

Figure 12: LTC 52 pie chart of final dV/dn sensitivities for modified IEEE 39-bus system

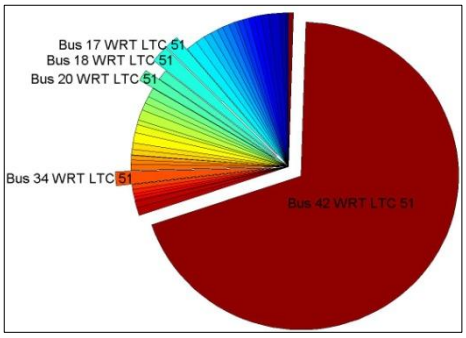

Figure 13: LTC 51 pie chart of final dV/dn sensitivities for modified IEEE 39-bus system

Conclusion

This paper applied initial and final values of trajectory sensitivities to assess the impact of devices designed for local control devices across the power system. Results are presented for tap-changing transformers via visualizations that indicate some devices have more significant and far-reaching influence.

References

[1] M. ILic and J. Zaborszky, *Dynamics and Control of Large Electric Power Systems.* 111 River Street, Hoboken, NJ 07030: John Wiley & Sons, Inc, 2000

[2] P. W. Sauer and M. A. Pai, *Power System Dynamics and Stability.* Upper Saddle River, New Jersey 07458: Prentice-Hall, 1998

[3] P. Kundur, *Power System Stability and Control.* New York: McGraw-Hill, 1994

[4] I. A. Hiskens and M. A. Pai, "Trajectory sensitivity analysis of hybrid systems," *Transactions on Circuits and Systems*, vol. 47, pp. 204-220, February 2000

[5] Área de Ingeniería Eléctrica, *IEEE 39 Bus power system test cases*, [Online]. Available: http://electrica.uc3m.es/pablole/varios_e.html